CAPACITY	TYPE NUMBER	CIRCUIT DIAGRAM
AC100-240V, 50/60Hz		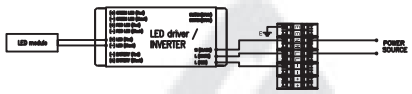
5W		

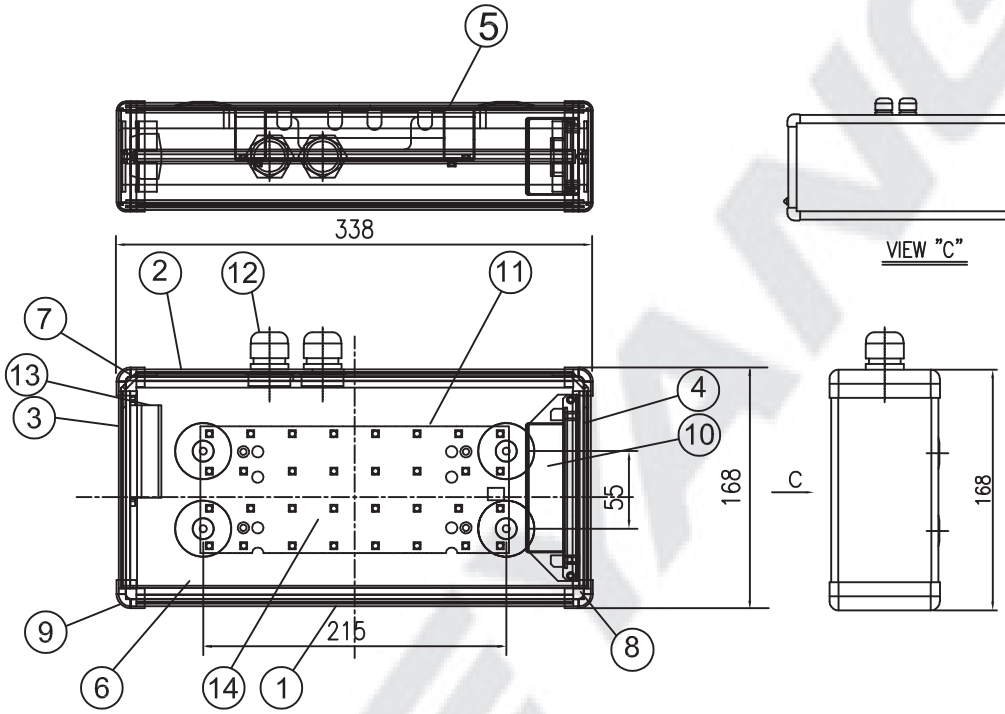

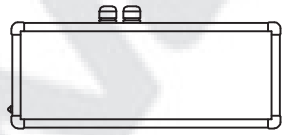

VIEW "C"

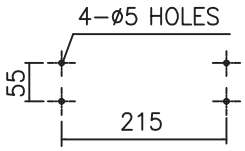

SETTING DIMENSION

NO	NAME OF PARTS	MATERIAL	Q'TY	REMARKS	NO	NAME OF PARTS	MATERIAL	Q'TY	REMARKS
14	LED module	-	1		7	UPPER BRACKET	ALUMINIUM	2	
13	TERMINAL BLOCK	-	1	CLAMPING 5P	6	SIGN COVER	ACRYL	1	
12	CABLE GLAND	-	2	PG16 (ø12~ø16)	5	REAR COVER	STEEL	1	
11	LED module BRACKET	STEEL	1		4	RIGHT BODY	ALUMINIUM	1	
10	LED driver CASE	STEEL	1		3	LEFT BODY	ALUMINIUM	1	
9	SIDE COVER	POLYCAR-BONATE	4		2	UPPER BODY	ALUMINIUM	1	
8	LOWER BRACKET	ALUMINIUM	2		1	LOWER BODY	ALUMINIUM	1	

APPROVED	B. K. KIM	UNIT	MM
CHECKED		SCALE	N/S
DRAWING	B. I. KIM	COLOR	N-9.3
DATE	2018.11.09	IP	44

TITLE;

LED EXIT LIGHT
(SURFACE TYPE)
FOR MARINE USE

DAEYANG

MODEL NO.	LEXIT105SS-0550A	WEIGHT	3.4 Kg
DWG NO.	L05110035	SHEET NO.	18

[보안인증] 황보건 2020/02/24 08:49:00